A-SAFE

# iFlex Cold Storage Pedestrian 3 Rail Barrier

PRH-1049-A-SAFE-15022024-2

# Production

## Dimensions (mm/inches)

| | |
|---|---|
| A | 180 / 7 |
| B | 180 / 7 |
| C | 14 / ⅝ |
| D | 600-2200 (400 increments)<br>23⅝ - 86⅝ (15¾ increments) |
| E | 500 / 4 |
| F | 775 / 30½ |
| G | 1050 / 41⅓ |
| H | 1136 / 44⅝ |
| I | 100 / 4 |
| J | 130 / 5⅛ |
| K | 450 / 17⅝ |

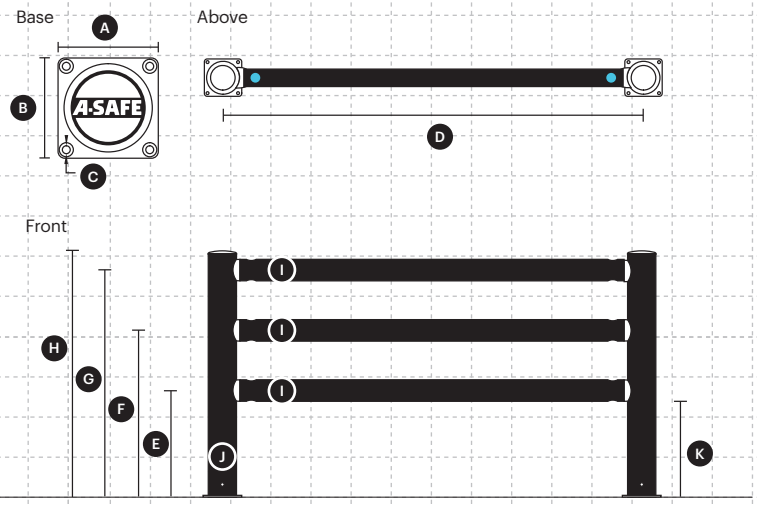


## Colour Combination

Standard

**Post**
Standard Black
RAL 9005*
PANTONE Black

**Rail**
Black
RAL 9005*
PANTONE Black

*Please note that the RAL and PANTONE colours listed are the closest match to standard A-SAFE colours, but may not be exact matches of the actual product colour and should be used for guidance only.

## Product Material

### Post and rails

MEMAPLEX™ SUB-ZERO

Ultimate strength polymer created from an exclusive composition of the most sophisticated polyolefins and rubber additives, expertly blended for unequalled strength and flexibility.

**Climate tested**
A-SAFE cold storage products are dynamically impact-tested to PAS 13 standards under realistic climate conditions to ensure they perform perfectly everytime.

### Standard base

Zinc nickel, electrophoretic coating

### Fixings

Steel

## Weight of product

| Posts | |
|---|---|
| End Post | 8.74 Kg / 19.27 lbs |
| Mid Post | 10.36 Kg / 22.84 lbs |

| Rails | |
|---|---|
| Typical Rail Length | Rail Diameter (mm/inches) |
| | 100 / 4 |
| 1000 / 39⅜ | 1.66 Kg / 3.66 lbs |
| 1400 / 55⅛ | 2.46 Kg / 5.42 lbs |
| 2200 / 86⅝ | 4.06 Kg / 8.94 lbs |

## Minimum order quantities

Not applicable on this product

# Suitability

### Environment

Internal use only

### ATEX Suitability

Not suitable in an explosive atmosphere

### Standard Base and Fixing

Zinc nickel, electrophoretic coating

**12mm Hex Head** Through Bolt, Z/P

### Vehicle Suitability

| Lightweight Counterbalance FLT | Horizontal Order Picker | Electric Pedestrian Truck | Manual Pallet Truck | Electric Pedestrian Stacker | Pedestrians |
|---|---|---|---|---|---|

### Fit for purpose application

| Cold Storage Suitable to -30°C | Traffic and pedestrian segregation | Column protection |
|---|---|---|

**Impact Zone**
450 - 1100mm
(17⅝ - 43⅓ inches)

| Material Properties | MEMAPLEX™ SUB-ZERO |
|---|---|
| Temperature Range | -30°C to 0°C |
| Ignition Temperature | 370°C to 390°C |
| Flash Point | 350°C to 370°C |
| Toxicity | Not Hazardous |
| Chemical Resistance | Excellent - ISO/TR 10358 |
| Weathering Stability (Grey Scale) | 5/5* |
| Light Stability (Blue Wool Scale) | 7/8** |
| Static Rating (Surface Resistivity) | $10^{15}$ - $10^{16}$ Ω |
| Hygiene Seals | Yes |

* Weathering scale 1 is very poor and 5 is excellent ** Light stability scale 1 is very poor and 8 is excellent

### Fire information

Manufactured from polypropylene. Polypropylene has an ignition temperature of 370º Celsius which is significantly higher than materials such as wooden pallets or polymers such as flexible PVC. This means that for combustion of an A-SAFE barrier to occur, a facility fire would need to be both large and well advanced, by which time any personnel would have already been evacuated to safety.

Polymer has been engineered to remain stable up to a temperature of 350º Celsius. In contrast, PVC starts breaking down at between 249º Celsius and 273º Celsius, and materials such as wood will burn instantly.

Our material has been specially developed to minimise the release of smoke during combustion. Furthermore, unlike environmentally hazardous polymers like PVC, it does not release harmful dioxins, hydrogen cyanide or hydrogen chloride when burnt.

### Environmental information

Research conducted by a leading plastic solutions company* showed that producing one metric tonne of polymer generates less carbon emissions than producing a tonne of steel**. Therefore, from the very outset of raw material production, polymer provides a significant $CO_2$ saving over steel.

For more information visit A-SAFE.com

* http://www.borealisgroup.com ** www.liloontheweb.org.uk/handbook/carbonfootprint

| Recycling Information | | | |
|---|---|---|---|
| Packaging | Post and Rails | Fixings | Bases |
| Mixed Recycled | 5 | Steel | Steel |

# *Fixings (Countersunk only)

| Fixing Type | Item No. | Description | Nom. Drill Hole (W) | Min. Drill Depth | Wrench Size | Torque Setting | Qty per Pack | Per Post |
|---|---|---|---|---|---|---|---|---|
| Standard | B-02-01-0036 | 12mm Hex Head Through Bolt, Z/P | 12mm / ½" | 85mm / 3⅜" | 13mm / ½"AF | 22.5Nm / 17ft/lb | 4 | 1 |
| Countersunk | B-02-01-0039 | 12mm CSK SKT Head Through Bolt, Z/P | 12mm / ½" | 95mm / 3¾" | 5mm / 3/16"AF | 22.5Nm / 17ft/lb | 4 | 1 |
| **Chemical/Resin | B-02-01-0044 | Chemical Anchor Stud 12 x160mm z/p | 14mm / 9/16" | 100mm / 4" | 19mm / ¾"AF | 40Nm / 30ft/lb | 1 | 4 |
| ***Removable | B-02-01-0042 | Internal-threaded anchor socket M12, Z/P | 20mm / 25/32" | 125mm / 5" | - | 40Nm / 30ft/lb | 1 | 4 |
| | B-02-02-0005 | M12x35mm Hex Head set screw z/p | | | 19mm / ¾"AF | | 1 | 4 |
| | B-02-02-0013 | M12 Form C Washer z/p | | | | | 1 | 4 |

| | | |
|---|---|---|
| Resin Tube | B-02-01-0046 | Chemical Resin 380ml tube |

** 1no Tube of resin required per 12no fixing bolts *** 1no Tube of resin required for 10no fixings bolts

## Ground Works

Before you install A-SAFE barrier we advise a site survey of the ground intended for the product. This information is crucial as the ground conditions can vastly affect the performance of the safety barrier.

We should always request to see the Operations and Maintenance Manual (OMM) for the building we are installing barrier. This document will give key information such as -

- Depth of concrete slab installed
- Areas where rebar is being used
- Areas where services are located in the building
- Operating temperatures of the facility

If an OMM is not available, we should request to produce an on-site pull-out test. The pull-out test gives us all the information we need to evaluate if an install is possible.

For more information please refer to the Ground Works document in the Product Hub on the A-SAFE SharePoint.

## Concrete Pad

130mm OD Post
12mm Fixing Bolts
180 x 180mm
Base Plate

- A Concrete Pad
- B Hardcore
- C Damp Proof Membrane

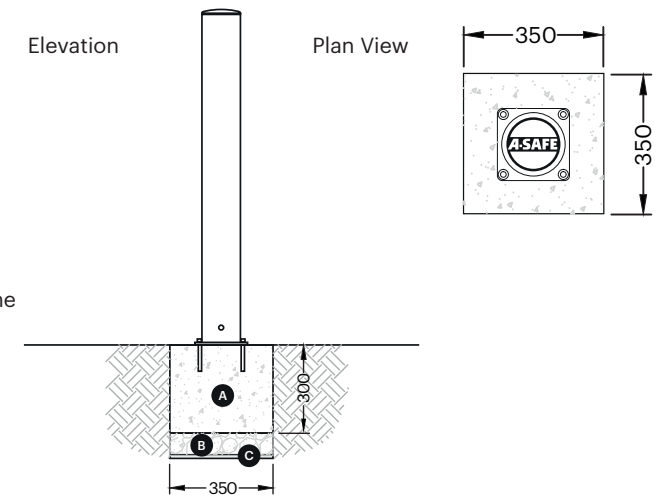


Dimensions of the concrete pad shown are a minimum size only.

***IMPORTANT.** The fixings data detailed above are based on A-SAFE supplied fixings. If a customer uses their own fixings, they must refer to specific install instructions.

# Part Codes

1. M-02-01-0006 = Cold Storage 130 Cap, Black and Blue
2. E-03-06-0001 = Cold Storage 25 x 25 x 3mm Wall x 1070mm, Blue – Locking Pin
3. S-04-07-0003 = Cold Storage Pedestrian Post 3 Rail, Countersunk Black and Blue – End Post
4. B-02-01-0039 = 12mm Fixings, FH II 12/25 SK A-Safe B-02-01-0039 (4 Pcs)
5. M-02-01-0009 = Cold Storage Pin Plug, Blue x 6 No
6. M-02-01-0008 = Cold Storage 100 Lock Pin, Black and Blue x 6 No
7. P-01-07-0010 to P-01-07-0014 = Rail 100mm OD, Black and Blue 600mm to 2200mm x 3 No – 400mm Increments
8. M-01-01-0007 = 130 Coupling, Black x 3 No
9. M-02-01-0007 = Cold Storage Coupling Cover, Black and Blue x 3 No

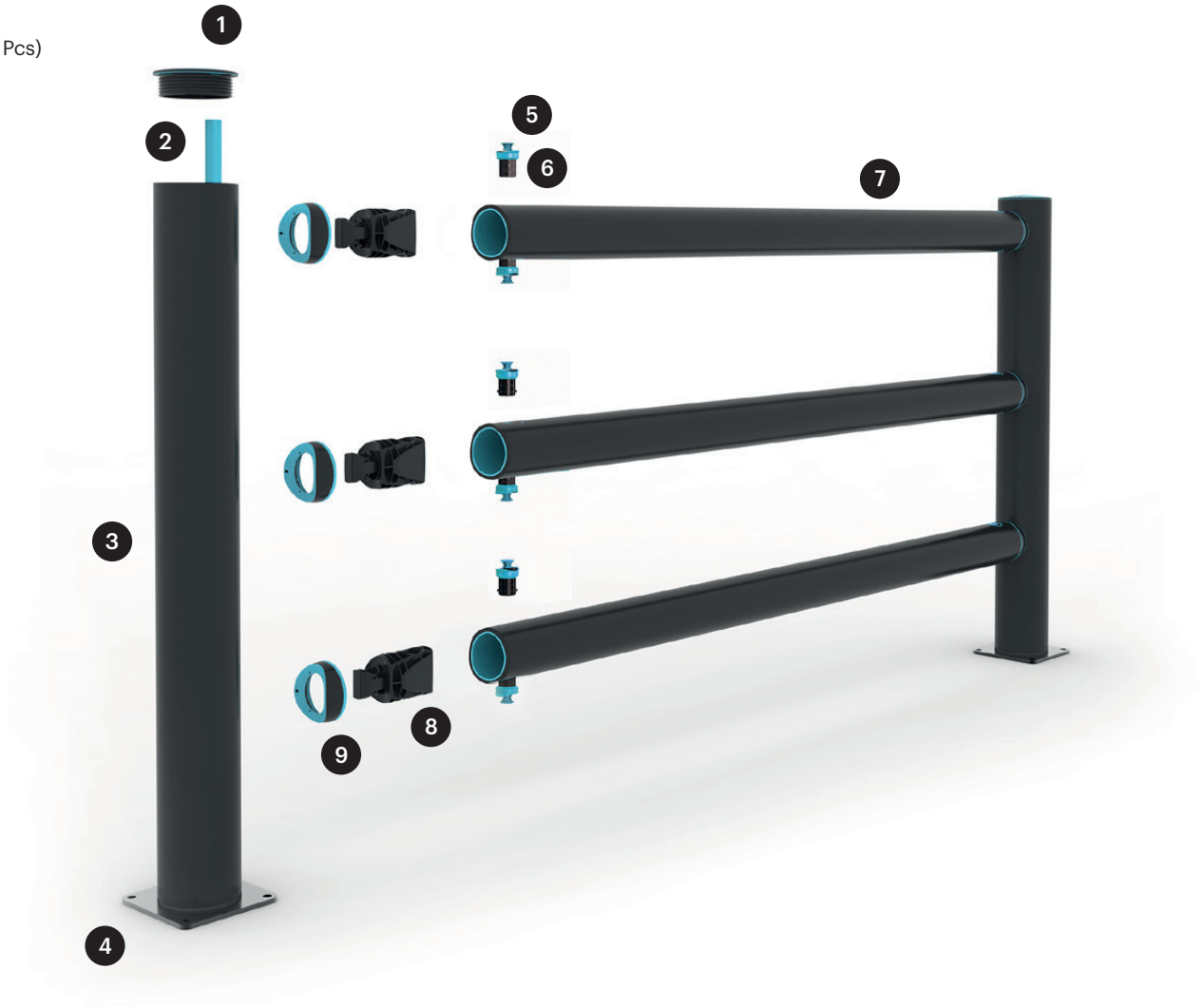

Data Sheets

Testing Videos

CAD

Install Documents

Certificates

If you have any questions please contact
the product management team at A-SAFE HQ
Product.Management@asafe.com

A-SAFE
PIONEERING WORKPLACE SAFETY

PRODUCTHUB

| | |
|---|---|
| Document Reference | PRH-1049-A-SAFE-15022024-2 |
| Document Description | iFlex Cold Storage Pedestrian 3 Rail Barrier |
| Date Created | November 2023 |
| Author/s | Matthew Briggs |
| Checked by | Jerry Budby |
| Approved by | Ben Allen |
| Revision | Version 2 - February 2024 |